item	NAME
1	SUCTION FILTER TANK
2	Relief Valve
3	Roots Blower
4	Moter
5	Suction Silencer
6	90 ELBOW
7	Pressure Gauge
8	Guard
9	Pedestal

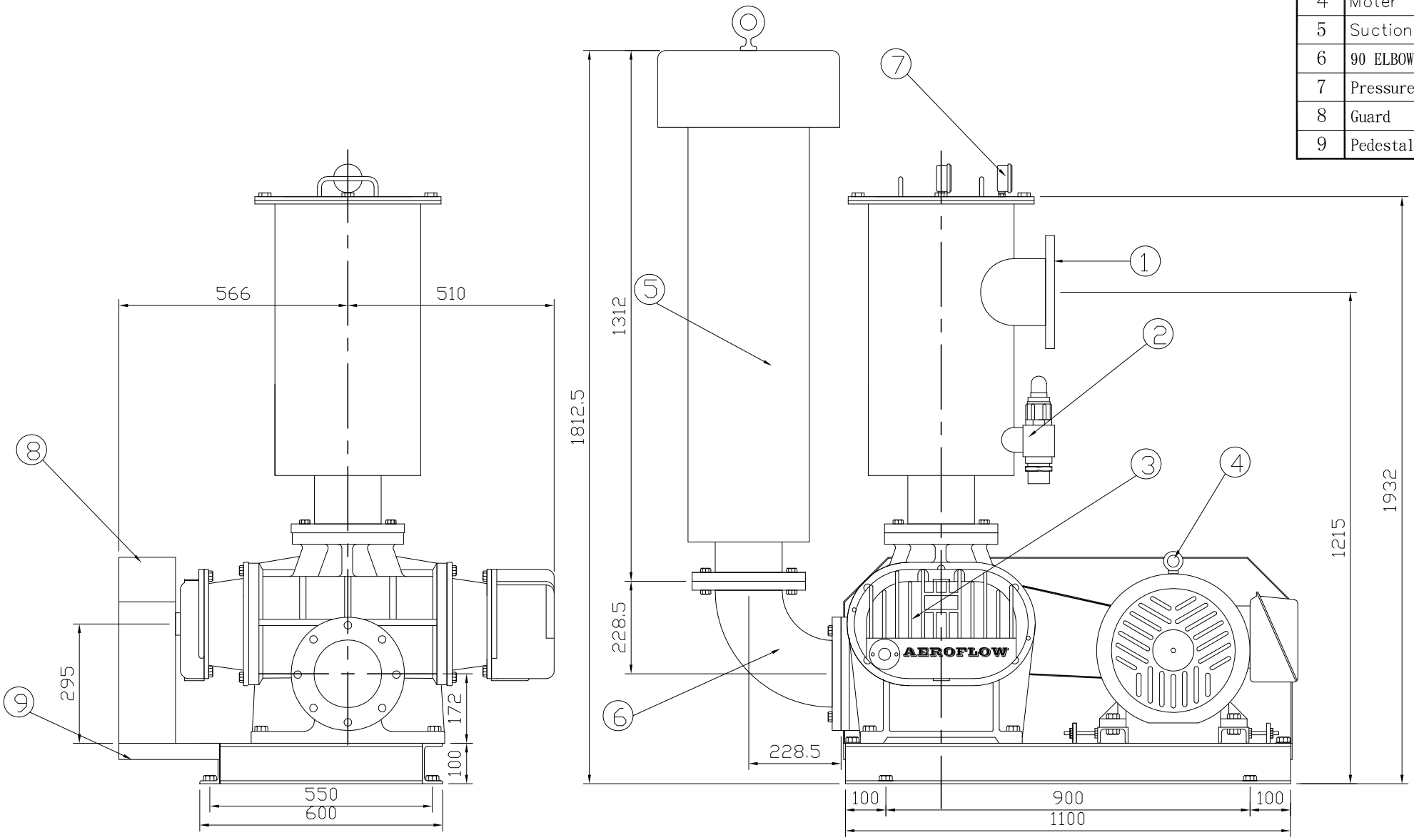

HEY-WEL MACHINERY CO., LTD.	Drawing Name	Type NO.	Drawing NO.	Material	Unit	Scale	Drew	Date
	Outline Drawing	RSV-150	C314-H0	Assembly	mm	A4 1/16	koko	08. 12. 04
	Revision	Description	Revision	Description	Revise	Check	Approved	Projection